Support frames

Support frames for single sided walls

User guide

HÜNNEBECK

BY BRAND SAFWAY

Contents

1 Product features

With the support frames from HÜNNEBECK it is possible to support one-faced walls up to a height of 8.6 m. The system consists of the support frames 325 and 500 and the base frames 200 and 200/2, providing ideal solutions for every wall height. Concrete pressures up to 60 kN/m^2 can be achieved.

The distance between frames is simply adapted to the desired wall height and the concrete pressure.

Due to the double vertical U-profiles of the support frames, any formwork system can be connected. The support frames can be adjusted with the integrated base jacks.

The loads due to fresh concrete pressure are discharged by the frames into the building structure – via the cast-in tensile anchor at the front base of the formwork and via the rear compressive jack of the support frame.

It is essential for the safe use of the support frames to verify the structural integrity and stability of the anchors, base-slabs and the load distribution into the ground.

The arrangement of the distances between the support frames and respective cast-in anchors must be selected on the basis of the calculated values, and the anchors must be positioned accurately when pouring the floor slab.

1.1 General information

This user guide provides important information about the installation and application of the HÜNNEBECK Support Frames, as well as precautions which are necessary for safe assembly and the reliable use. This user guide is intended to allow effective work with the Support Frames. Please read the user guide carefully prior to assembly and use of the Support Frames and keep them at hand as a reference book.

HÜNNEBECK products are exclusively intended for the commercial use by technically qualified users.

1.2 Safety instructions

Important information regarding the intended use and safe application of formwork and falsework

The contractor is responsible for drawing up a comprehensive risk assessment and a set of installation instructions. The latter is not usually identical to the user guide.

- Risk assessment
  The contractor is responsible for the compilation, documentation, implementation and revision of a risk assessment for each construction site. Their employees are obliged to implement the measures resulting from this in accordance with all legal requirements.
- Installation instructions
  The contractor is responsible for compiling a written set of installation instructions. The user guide forms part of the basis for the compilation of a set of installation instructions.

Product features

- User guide
  Formwork is technical work equipment which is intended for commercial use only. The intended use must take place exclusively through properly trained personnel and appropriately qualified supervisory personnel. The user guide is an integral component of the formwork construction. It comprises at least safety guidelines, details on the standard configuration and intended use, as well as the system description.
  The functional instructions (standard configuration) contained in the user guide are to be complied with as stated. Enhancements, deviations or changes represent a potential risk and therefore require separate verification (with the help of a risk assessment) or a set of installation instructions which comply with the relevant laws, standards and safety regulations. The same applies in those cases where formwork and/or falsework components are provided by the contractor.
- Availability of the user guide
  The contractor must ensure that the user guide provided by the manufacturer or formwork supplier is available at the place of use. Site personnel are to be informed of this before assembly and use takes place, and that it is available at all times.
- Representations
  The representations shown in the user guide are, in part, situations of assembly and not always complete in terms of safety considerations. Safety installations which may not have been shown in these representations must nevertheless be available.
- Storage and transportation
  The special requirements of the respective formwork constructions regarding transportation procedures as well as storage must be complied with. By way of example, name the appropriate lifting gear to be used.
- Material check
  Formwork and falsework material deliveries are to be checked on arrival at the construction site/place of destination as well as before each use to ensure that they are in perfect condition and function correctly. Changes to the formwork materials are not permitted.
- Spare parts and repairs
  Only original components may be used as spare parts. Repairs are to be carried out by the manufacturer or authorized repair facilities only.
- Use of other products
  Combining formwork components from different manufacturers carries certain risks. They are to be individually verified and may result in the compilation of a separate set of assembly instructions required for the installation of the equipment.

- Safety symbols
  Individual safety symbols must be complied with.

Examples:

DANGER	**Danger!** DANGER indicates a hazardous situation which, if not avoided, will result in death or serious injury.
WARNING	**Warning!** WARNING indicates a hazardous situation which, if not avoided, could result in death or serious injury.
CAUTION	**Caution!** CAUTION used with the safety alert symbol indicates a hazardous situation which, if not avoided, could result in minor or moderate injury.
NOTE	**Note** NOTE refers to practices not related to personal injury.
VISUAL CHECK	VISUAL CHECK refers to a visual check and is not related to personal injury.

- Miscellaneous
  Technical improvements and modifications are subject to change without notice.
  For the safety-related application and use of the products, all current country-specific laws, standards as well as other safety regulations are to be complied with without exception. They form a part of the obligations of employers and employees regarding industrial safety. This results in, among other things, the responsibility of the contractor to ensure the stability of the formwork and falsework constructions as well as the structure during all stages of construction.
  This also includes the basic assembly, dismantling and transportation of the formwork and falsework constructions or their components. The complete construction is to be checked during and after assembly.

2 Components

	Component	Product code	Weight [kg]
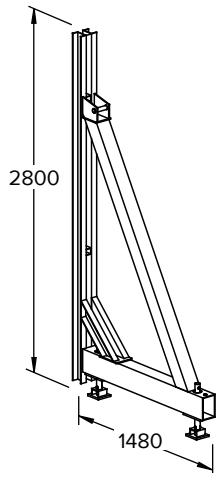	**Support frame 325** For single-sided wall formwork up to a max. height of 3.25 m.	**486359**	**177.48**
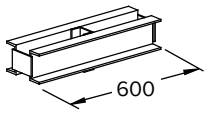	**Tying bar 12/60** The loads arising during the use of the support frame 325 are discharged via the tying bar into the ground.	**486771**	**18.20**
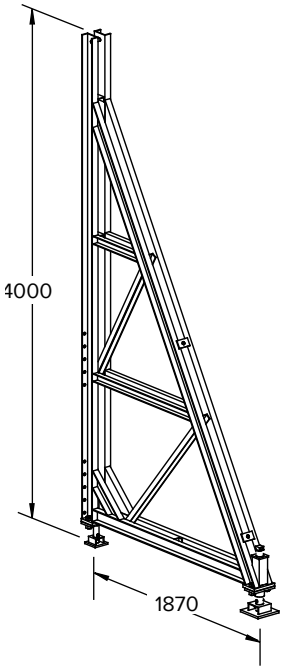	**Support frame 500** For single-sided wall formwork up to a max. height of 5.00 m.	**451817**	**304.90**
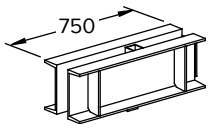	**SF tying bar 24/75** The loads arising during the use of the support frame 500 (and with SF lower part 200) are discharged via the tying bar into the ground.	**484864**	**58.30**

*only rental [1]no rental

Unless stated otherwise all dimensions are in mm

	Component	Product code	Weight [kg]
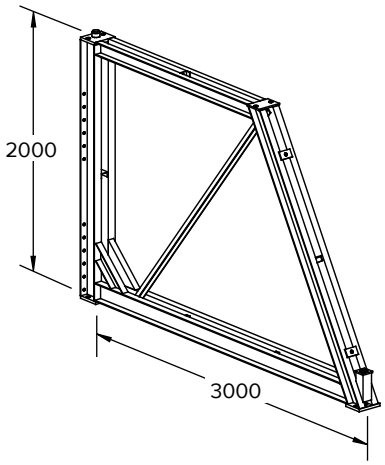	**SF lower part 200** Used together with the support frame 500 for single-sided wall formwork up to a max. height of 6.6 m. The base jacks of the Support frame are fitted to the SF Lower part 20 and the two components fastened with four M27 x 70 bolts and A29 washers.	**450021**	**315.02**
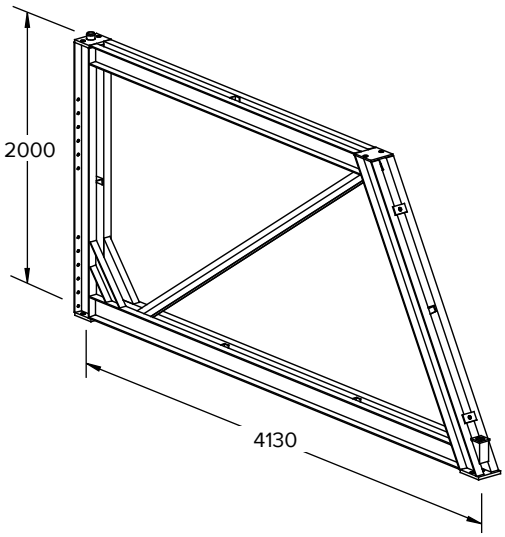	**SF lower part 200/2** Used together with the support frame 500 and the SF lower part 200 for formwork heights of up to 9 m. Special proof of structural strength required for distance between support frames and anchoring loads.	**581759**	**511.55**
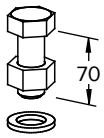	**Bolt + Nut M27x70[1] (grade 5.6)** **Washer A29[1]** To fasten support frame 500 to SF lower part 200 and 200/2 (4 of each per connection; 2 w.a.f. 41 wrenches required).	**451964** **451975**	**0.63** **0.08**
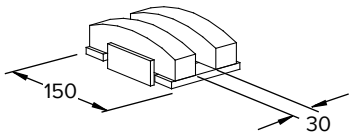	**SF tie bearing** By using the SF tie bearings, the loads are correctly discharged into the tying bar 12/60, whatever the anchor angle (35° – 55°).	**484912**	**3.00**
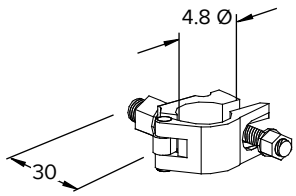	**Half coupler 48/M20x30 w.a.f. 22** Fastened to the supporting frames, the half couplers permit the attachment of tube-and-coupler bracing to stiffen the formwork structure. W.a.f. 22 socket wrench (or ratchet wrench with extension) required.	**2488**	**0.90**

2.1 Components for fastening the formwork

	Component	Product code	Weight [kg]
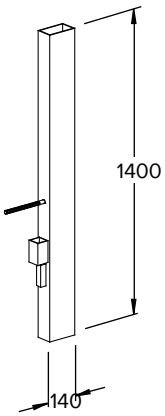	**SF extension bar** For extending the support frame 500 to receive a 5.4 m high MANTO formwork unit (2 x 2.7 m). Fastened with 1 tension nut (product code 197332). Max. pouring height 5 m.	**484680**	**23.55**

NOTE

Note

The support frames must always be positioned at the joint between the formwork panels.

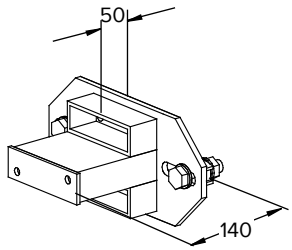	**KG distance keeper** Creates space between the frame formwork and the support frame. For independent arrangement of the support frames, 10 cm profiled walers are neccessary (see page 28).	**543097**	**5.50**
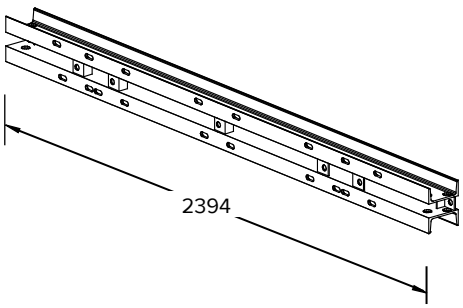	**SF waler 240** Permits the assembly of a 2.4 m wide formwork unit from the MANTO formwork and 2 or 3 support frames with non-positive joints. Beneficial for multiple re-use.	**562280**	**79.70**
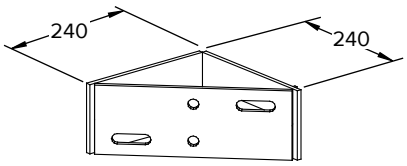	**SF corner part** Connects the SF waler 240 together in (90°) corners and permits the connection of a diagonal support frame.	**564500**	**7.60**

*only rental [1]no rental

Unless stated otherwise all dimensions are in mm

	Component	Product code	Weight [kg]
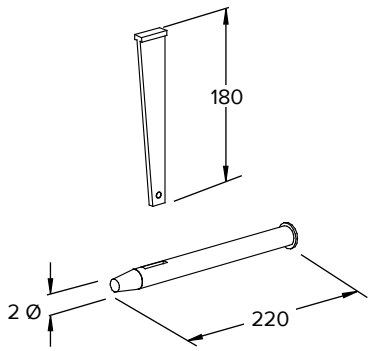	**Column waler bolt**	**569189**	**0.54**
	Column waler wedge	**540049**	**0.20**
	The SF waler 240 is fastened against the MANTO panels with the column waler bolt and column waler wedge. The wedge is also used to connect the SF waler 240 to the SF corner part.		
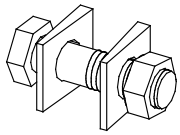	**Connection bolt**	**566005**	**0.24**
	Fastens the SF waler 240 to the support frame 500 and the SF lower part 200 via their holes in the vertical profile (M16 x 60 MuZ bolt with two 18 DIN 434 washers).		
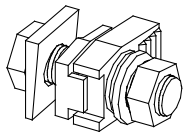	**Clamping bolt**	**566016**	**0.34**
	Clamps the SF waler 240 to the front of the vertical profile of the support frames (M16x60 bolt with nut and one 18 DIN 434 washer, one 18 Z DIN 126 washer and one clamping element with matching washer).		
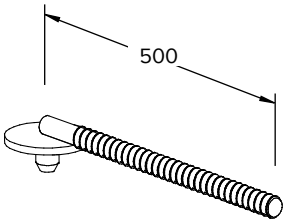	**Waler spanner L**	**454410**	**1.07**
	Can be hooked into the bar profiles of the support frame to connect the formwork to the support frames (one tension nut, product code 197332, to be provided additionally).		
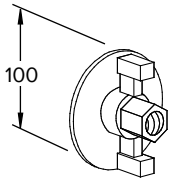	**Tension nut (max. perm. load = 40 kN)**	**197332**	**0.65**
	Used together with the waler spanner L or tie rod 15.0 to fasten the formwork.		
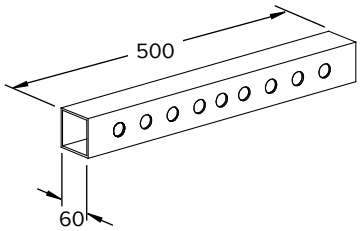	**Center tube 50**	**524721**	**3.40**
	Serves as a cross member behind the vertical supporting frame profile to enable the formwork to be fastened.		

	Component	Product code	Weight [kg]
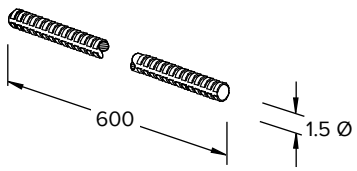	**Tie rod 60, galvanized** Serves as a cross member behind the vertical supporting frame profile to enable the formwork to be fastened. Permissible load: 90 kN	**164524**	**0.90**

NOTE

Note

Do not weld or heat tie rods, due to danger of breakage.

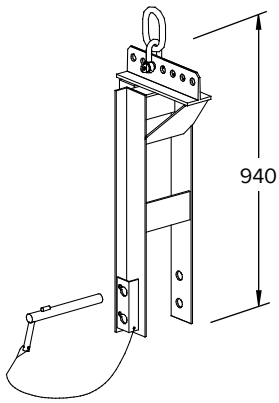	**SF shifting hook** The SF shifting hook facilitates the handling of pre-assembled units with the optimal center of gravity. For connection to support frames 500 and 325 (2 hooks per job-site).	**562213**	**28.53**

2.2 Anchoring components

2.2.1 DW 15 anchor materials with max. permitted tensile load to DIN 18216 = 90 kN

	Component	Product code	Weight [kg]
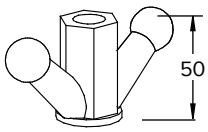	**Wing nut galv.** Employed together with matching counter plate 12/12. Tightened with w.a.f. 27 wrench, hammer or round bar.	**509618**	**0.32**
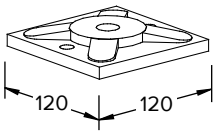	**Counter plate 12/12[1])** (See wing nut 15.)	**509559**	**1.00**
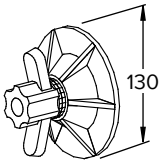	**MANTO tie nut DW 15** Can easily be loosened with the ratchet by means of integrated sliding discs even under full tie load (see page 24). Permissible load: 90 kN.	**464600**	**1.26**

*only rental [1])no rental

Unless stated otherwise all dimensions are in mm

	Component	Product code	Weight [kg]
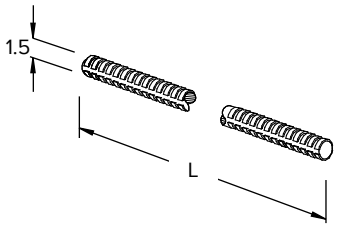	**Tie rod 50 (DW15)[1)]**	**102527**	**0.72**
	Tie rod 75 (DW15)[1)]	**437660**	**1.08**
	Tie rod 100 (DW15)[1)]	**24387**	**1.44**
	Tie rod 130 (DW15)[1)]	**20481**	**1.87**
	Extends the cast-in anchor element to the tie nut.		

NOTE

Note

Do not weld or heat tie rods, due to danger of breakage.

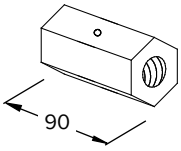	**Hexagon nut 15/90 S[1)]** Connects cast-in and re-usable anchor elements.	**164546**	**0.38**
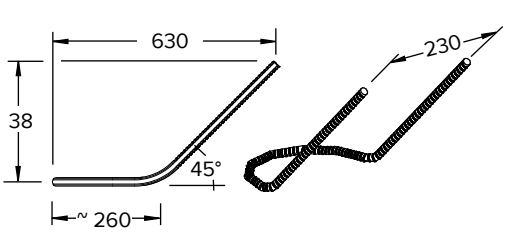	**Anchor stirrup DW15[1)]** Is cast in and discharges the tensile loads into the building structure. (Permitted load 2 x 90 kN.)	**602017**	**2.20**

NOTE

Note

Do not weld or heat tie rods, due to danger of breackage.

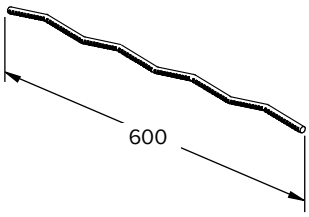	**Pigtail anchor 60[1)]** Is cast in and transferes the appearing tension loads into the building.	**509581**	**1.00**

NOTE

Note

Do not weld or heat tie rods, due to danger of breakage.

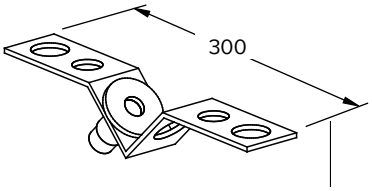	**Alignm. prof. 45 degr. cpl./50 pcs** Fixes the cast-in anchor elements such as loop ties or pigtail ties in the reinforcement and aligns them at a 45° angle. The alignment profiles are not re-usable and are cast in (for DW 15 only).	**574631**	**22.00**

2.2.2 DW 20 anchor materials with max. permitted tensile load to DIN 18216 = 150 kN

	Component	Product code	Weight [kg]
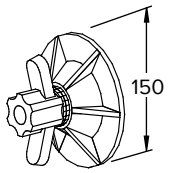	**Tie nut 150** One-piece and easy to release (w.a.f. 36).	**531481**	**1.51**
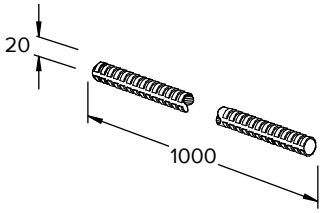	**Tie rod 20/100[1)]** Extends the cast-in anchor element to the tie nut.	**531600**	**2.56**

NOTE

Note
Do not weld or heat tie rods because danger of breackage.

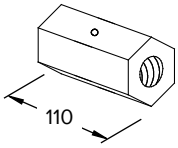	**Coupling nut 20/130[1)]** Connects cast-in (anchor loop) and re-usable anchor elements (tie rod).	**582374**	**0.74**
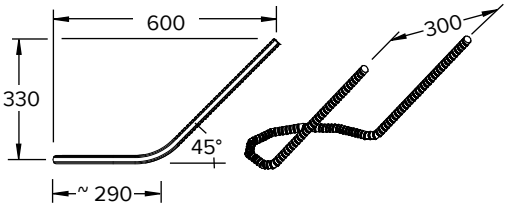	**Anchor stirrup DW20[1)]** Is cast in and discharges the tensile loads into the building structure. (Permitted load 2 x 150 kN).	**602018**	**4.20**

NOTE

Note
Do not weld or heat tie rods because danger of breackage.

2.2.3 DW 26.5 anchor materials with max. permitted tensile load to DIN 18216 = 250 kN

	Component	Product code	Weight [kg]
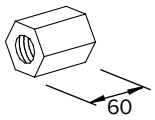	**Nut 26.5 dia., w.a.f. 46/60[1)]** Employed together with plate 12/12/2 (w.a.f. 46).	**509684**	**0.50**
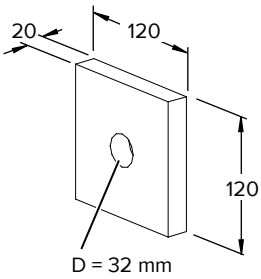	**Counter plate 12/12/2** Used as an anchor plate together with hexagon nut 26/60.	**509695**	**2.20**

*only rental [1)]no rental

Unless stated otherwise all dimensions are in mm

	Component	Product code	Weight [kg]
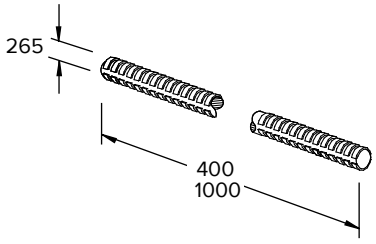	**Tie rod 26.5/40[1)]** **Tie rod 26.5 /100[1)]** For the cast-in and re-usable anchor elements of the support frames.	**509651** **509662**	**1.80** **4.50**

NOTE

Note

Do not weld or heat tie rods because danger of breackage.

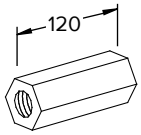	**Coupling nut 26.5/120** Connects cast-in element to the re-usable anchor elements (w.a.f. 46).	**509673**	**1.10**
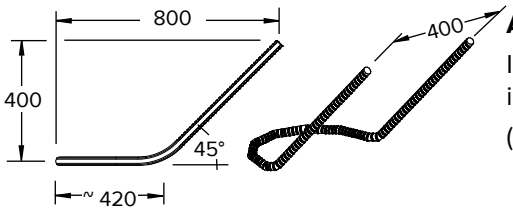	**Anchor stirrup 26.5[1)]** Is cast in and discharges the tensile loads into the building structure. (Permitted load 2 x 240 kN.)	**602019**	**9.90**

NOTE

Note

Do not weld or heat tie rods because danger of breackage.

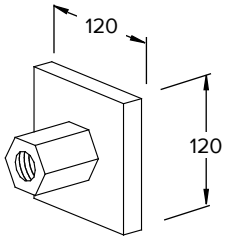	**Anchor plate with nut 26.51)** Discharges tensile loads into the building and remains permanently in the concrete with a tie rod.	**509640**	**3.60**

3 Dimensions

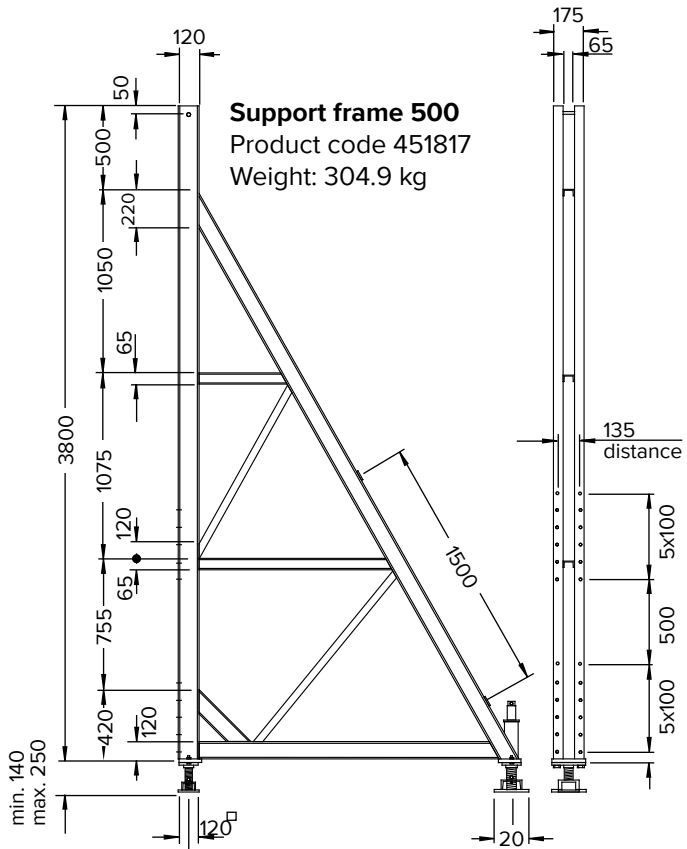

Support frame 500
Product code 451817
Weight: 304.9 kg

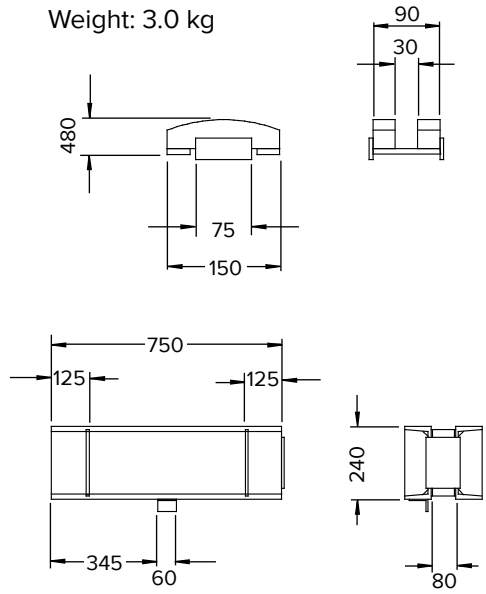

SF-tie bearing
Product code 484912
Weight: 3.0 kg

SF tying bar 24/75
Product code 484864
Weight: 59.4 kg

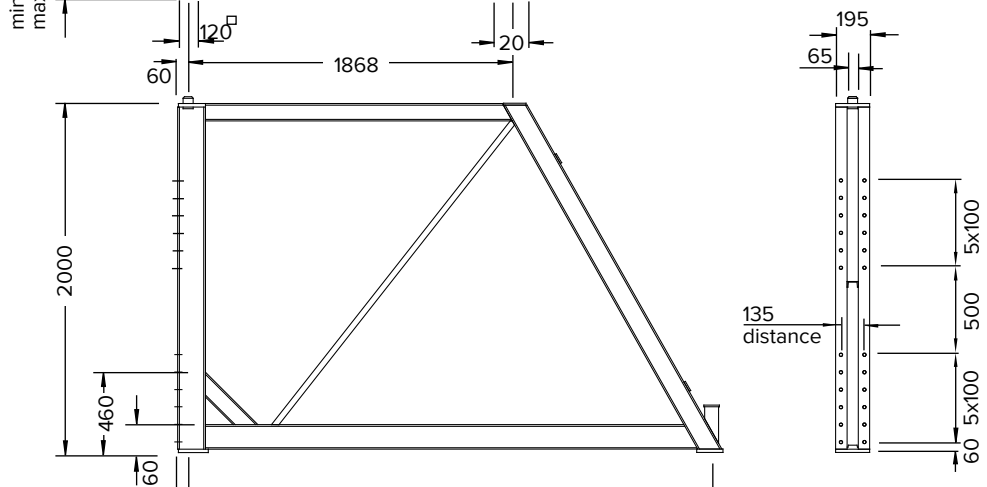

SF lower part 200
Product code 450021
Weight: 308.5 kg

Holes 17 dia.

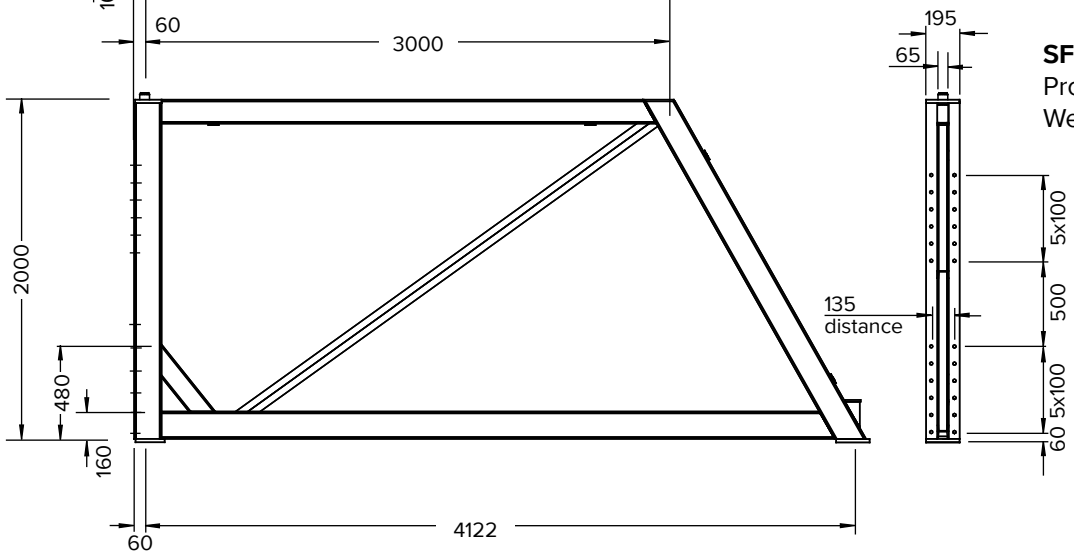

SF lower part 200/2
Product code 581759
Weight: 511.5 kg

Holes 17 dia.

Unless stated otherwise all dimensions are in mm

Support frame 325
Product code 486359
Weight: 170.6 kg

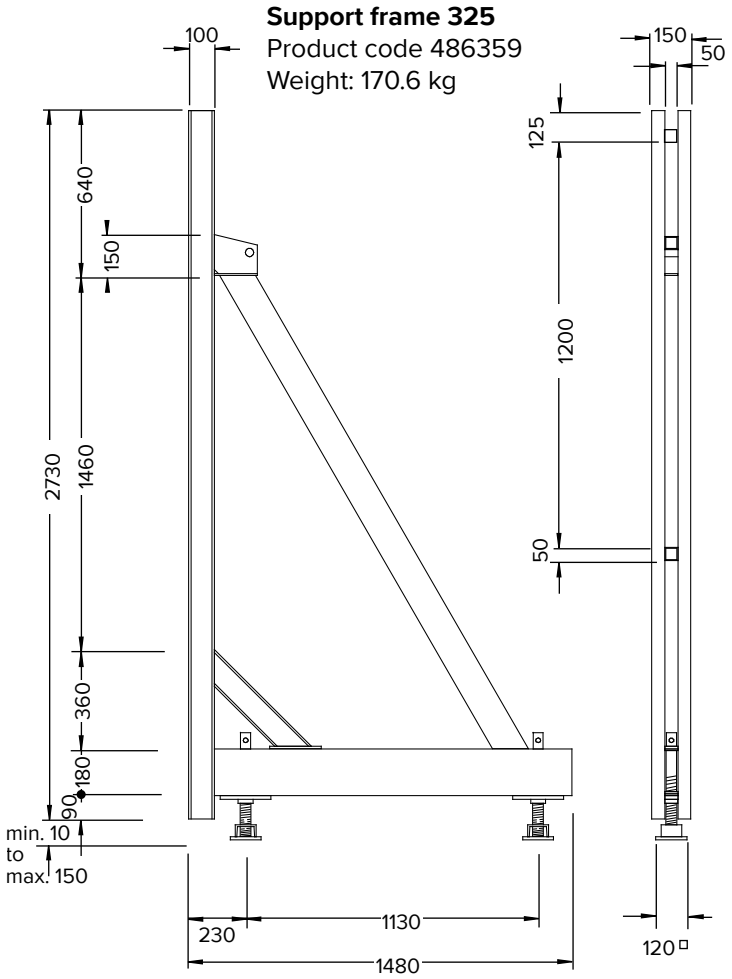

SF waler 240
Product code 562280
Weight: 79.5 kg

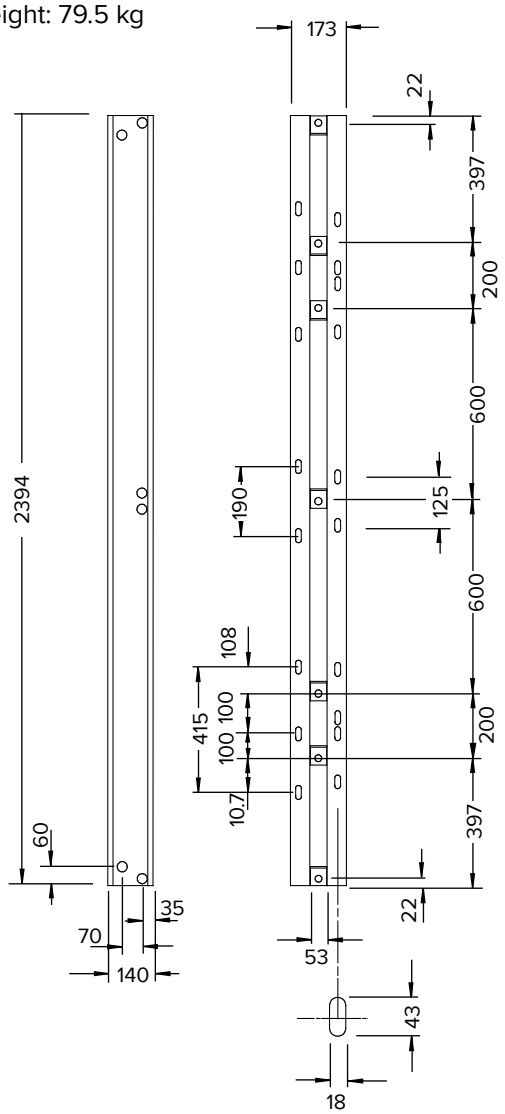

Tying bar 12/60
Product code 486771
Weight: 18.2 kg

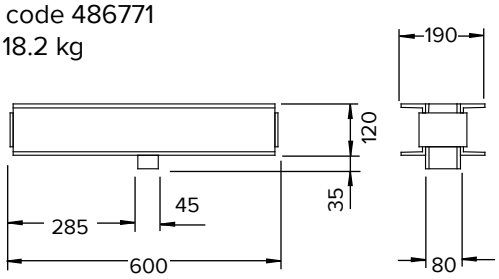

KG distance keeper
Product code 543097
Weight: 5.5 kg

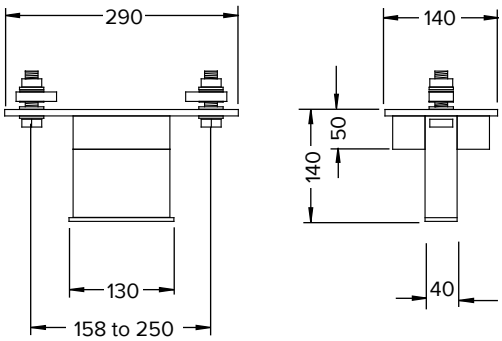

SF corner part
Product code 564500
Weight: 7.6 kg

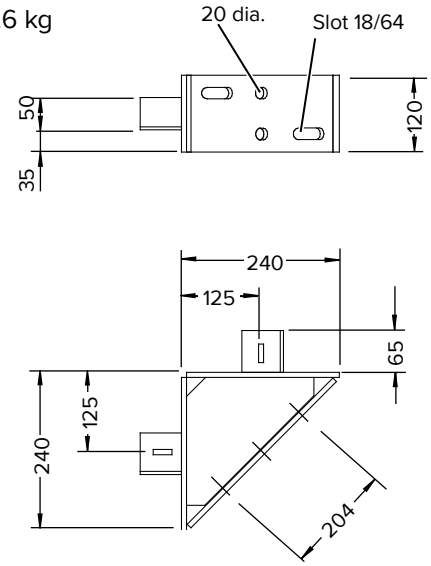

4 Maximum pouring heights

Support frame 325

For “horizontal” frame formwork, the support frames must be positioned immediately behind the formwork at the tie holes. The frames are fastened with the waler spanners and tension nuts. Pay attention to the positions of the projecting anchors!

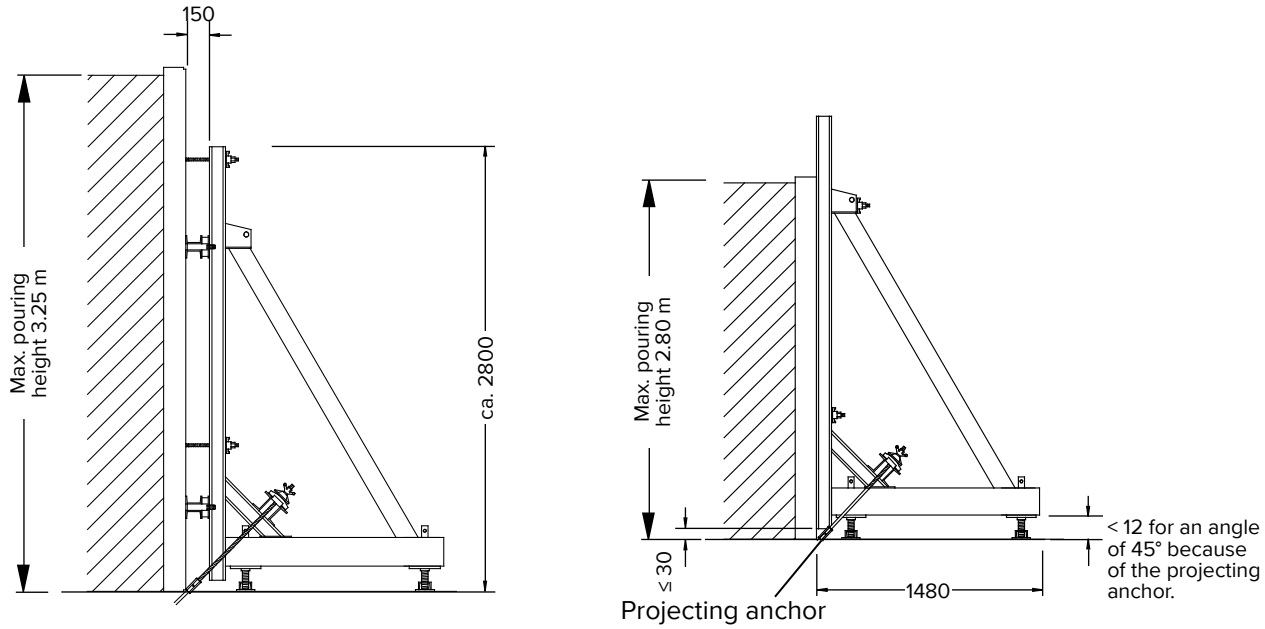

Support frame 325 behind a MANTO form. Waler profiles permit a free choice of distances between support frames.

WARNING

Warning!

Before fastening them to the formwork, always unscrew the jacks of the support frames to their central unscrewed position (ideal position)!

Unless stated otherwise all dimensions are in mm

Support frame 500

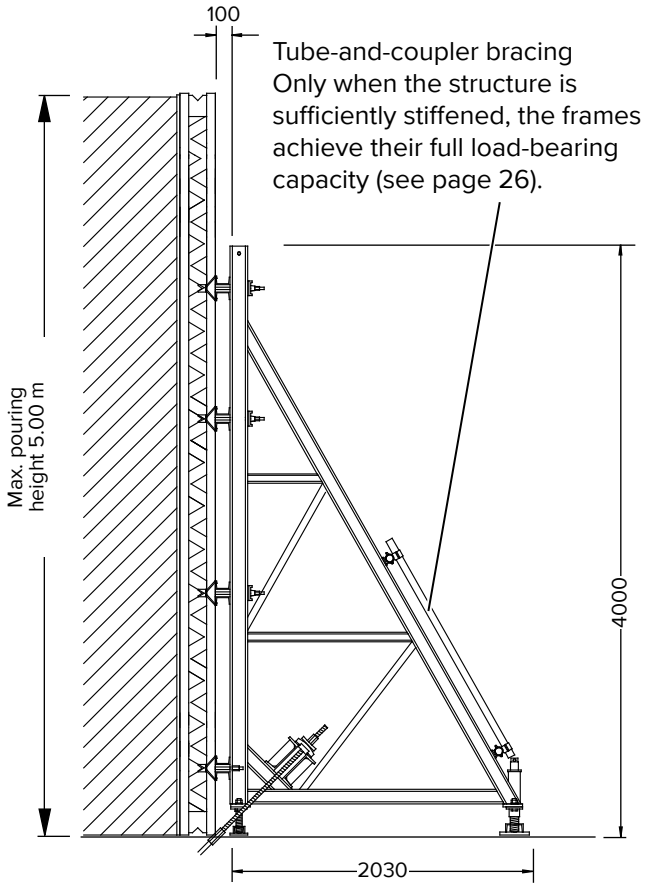

Support frame 500 behind a timber beam form. Simple fastening with tie rods and tie nuts.

Maximum pouring heights

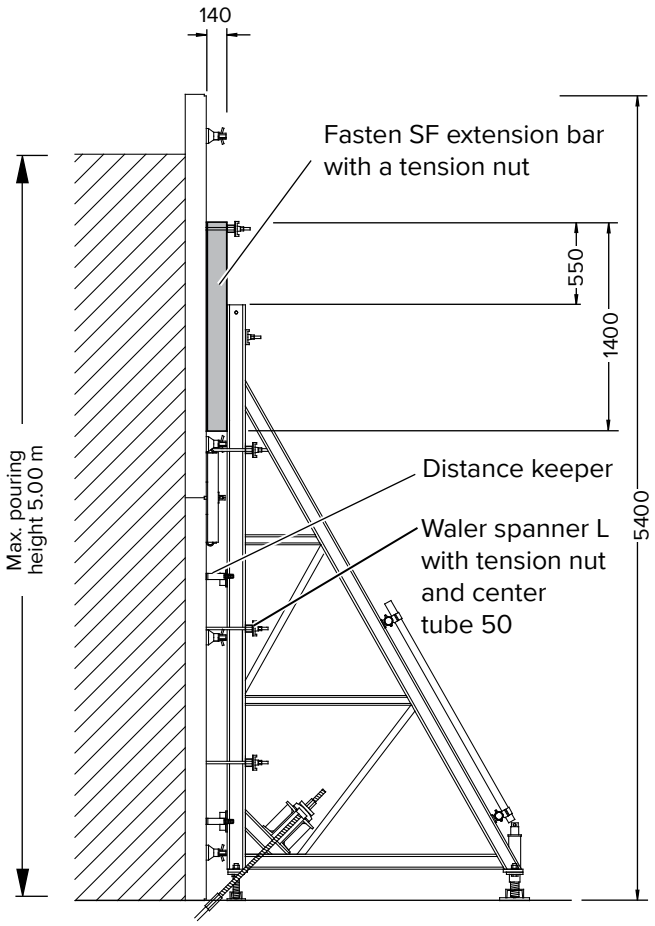

By using the SF extension bar it is possible to employ the support frame 500 behind a 5.4 m tall MANTO formwork.

WARNING	**Warning!** In this case the support frames must always be placed at the formwork panel joint. The max. pouring height remains limited to 5 m.

Unless stated otherwise all dimensions are in mm

Support frame 500 with SF lower part 200

The figure shows the support frame 500 extended with the SF lower part 200. In front of them, walers 240 are non-positively fastened in alignment with the tie holes of the MANTO formwork (see pages 28 et seq.).

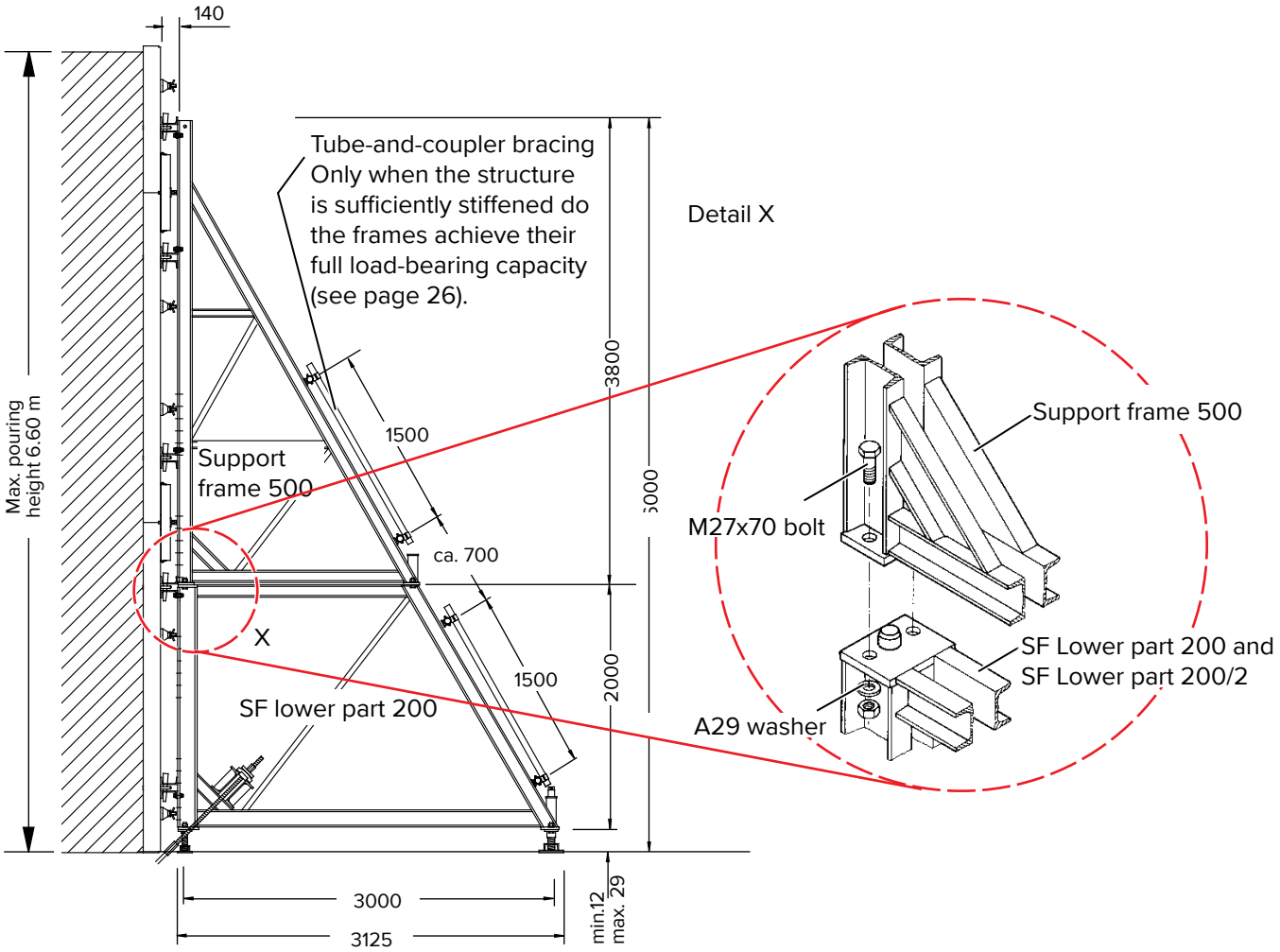

As a result of extension with the SF lower part 200, it is possible to achieve a maximum permitted concrete pouring height of 6.6 m. The base jacks of the support frame 500 are attached to the SF lower part 200 in this case. The two components are fastened together with four extra M27 x 70 bolts with nuts + A29 washers. Two w.a.f. 41 wrenches are required for this.

with SF lower part 200 and SF lower part 200/2

Employed together with the support frame 500 and the SF lower part 200, the SF lower part 200/2 makes it possible to create a supporting structure for tie-free walls up to 8.6 m high. During assembly, the jacks of the support frame 500 are attached to the SF lower part 200/2. The components are fastened together with four M27 bolts at each joint level.

WARNING	**Warning!** It is important here as well that the supporting structure is spatially stiffened with sufficient tube-and-coupler bracing. For projects on this scale, proof of structural strength must always be obtained.

Maximum pouring heights

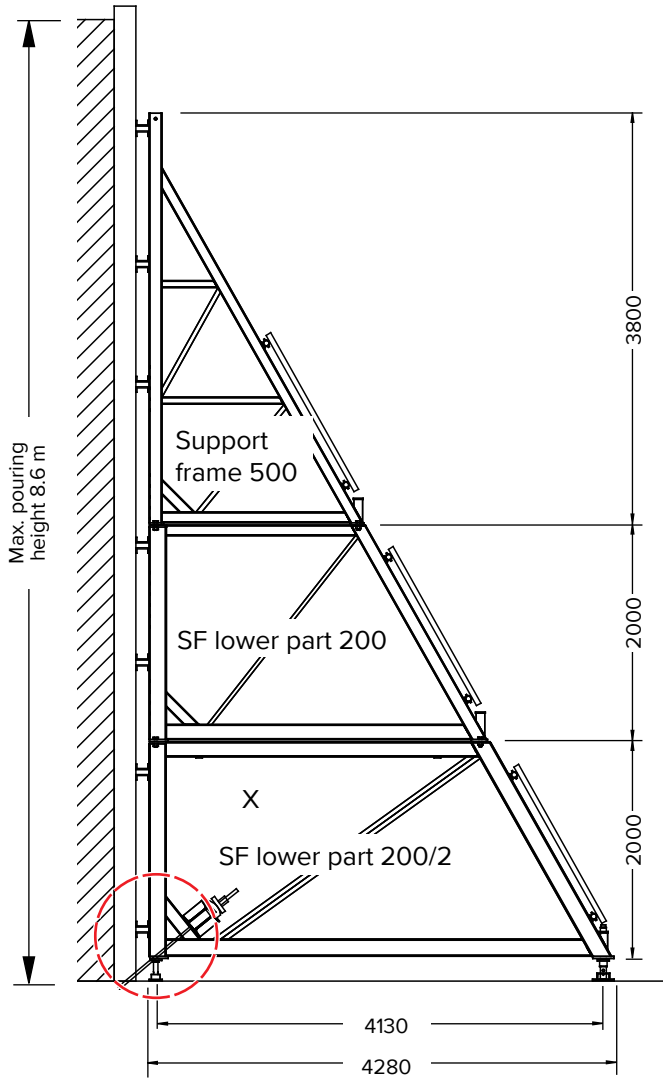

Dimensions
For the connection between the support frames and the formwork, these ideal dimensions should be observed.

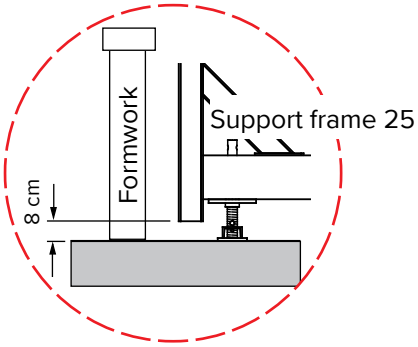

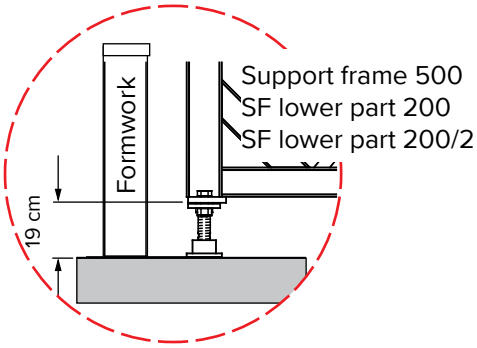

Unless stated otherwise all dimensions are in mm

5 Anchoring

The support frame is anchored with the tying bar, which discharges the tensile loads via two tie rods into the cast-in anchor. The position of the bar on the support frame can be varied. By using the SF tie bearing, loads can be effectively discharged with anchor angles varying from 35° to 55°. The positions of the SF tie bearings can also be varied on the tie bar. Two SF tie bearings are required per support frame. The cast-in anchor is chosen according to the anticipated loads. There are three anchor systems available.

DW 15	with 2 x 90kN = 180 kN permitted tensile load
DW 20	with 2 x 150kN = 300 kN permitted tensile load
DW 26.5	with 2 x 240kN = 480 kN permitted tensile load

Attach the selected anchor components to the reinforcing mesh so that they cannot move. Align them in accordance with the fixed projection length C, the distance between support frames and the angle of projection (see also page 23).

Support frame 325

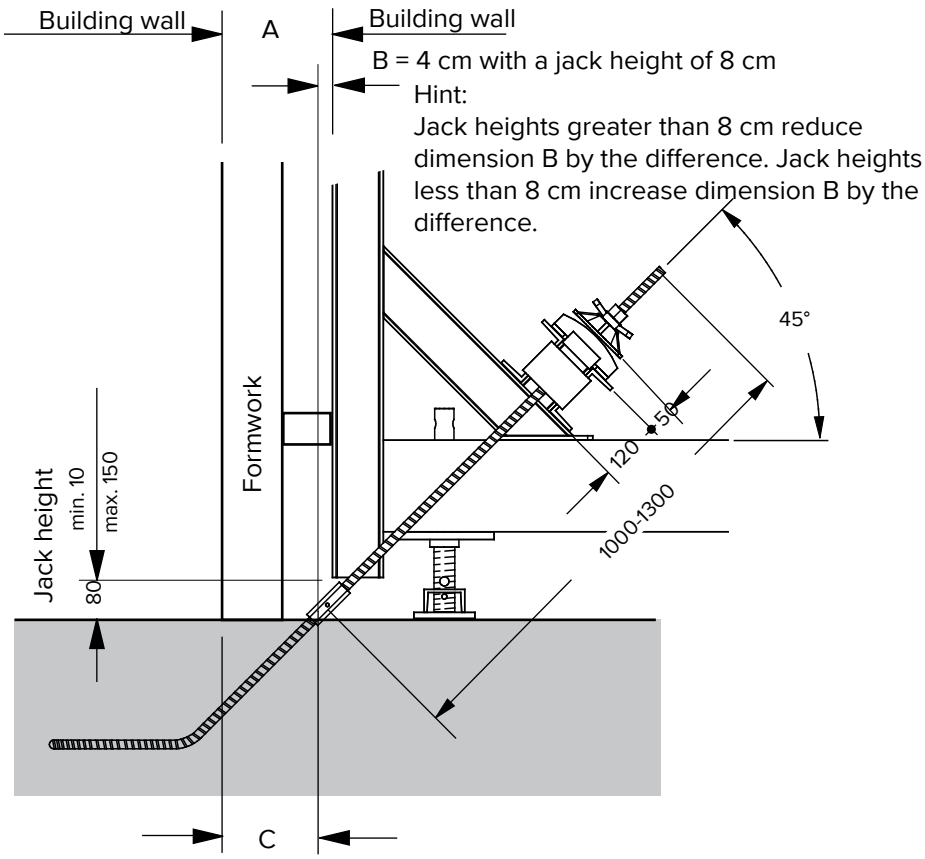

A = Thickness of formwork + walers or distance keeper
B = Horizontal projection distance of anchor components from front edge of supporting panel
C = A - B = Horizontal projection distance of anchor components from front edge of building wall.

WARNING

Warning!
The anchor stirrup DW 26.5 has perm. tension force 2 x 240 kN

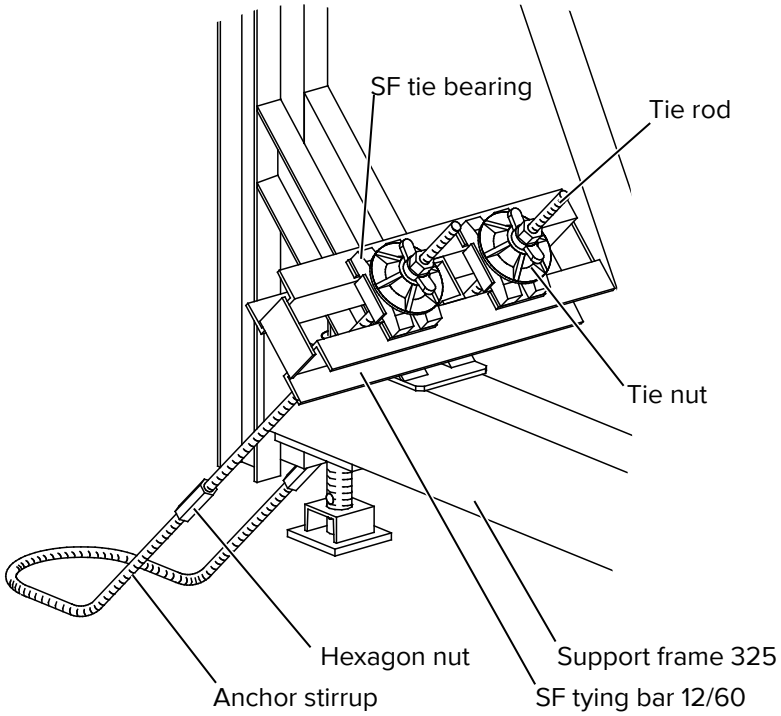

The cast-in permanent anchor componentes can be anchor stirrups or tie rods with tie nuts, as shown here (see below).

45° alignment profiles for anchor components with the DW 15 thread fix these parts in the reinforcing mesh and in this case align the loop tie at a 45° angle.

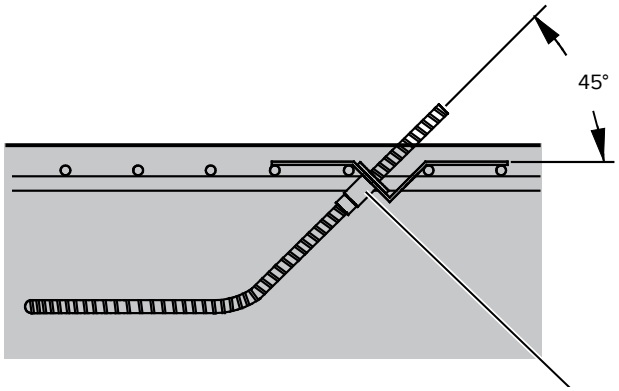

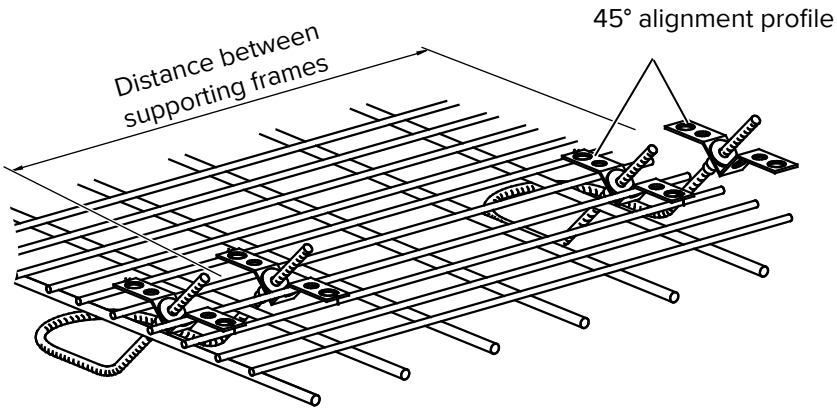

Unless stated otherwise all dimensions are in mm

6 Connection of timber beam

Support frame 500 and SF lower 200

Support frames 500 and SF lower frames 200 and 200/2 are anchored with the aid of the SF tying bar 24/75.

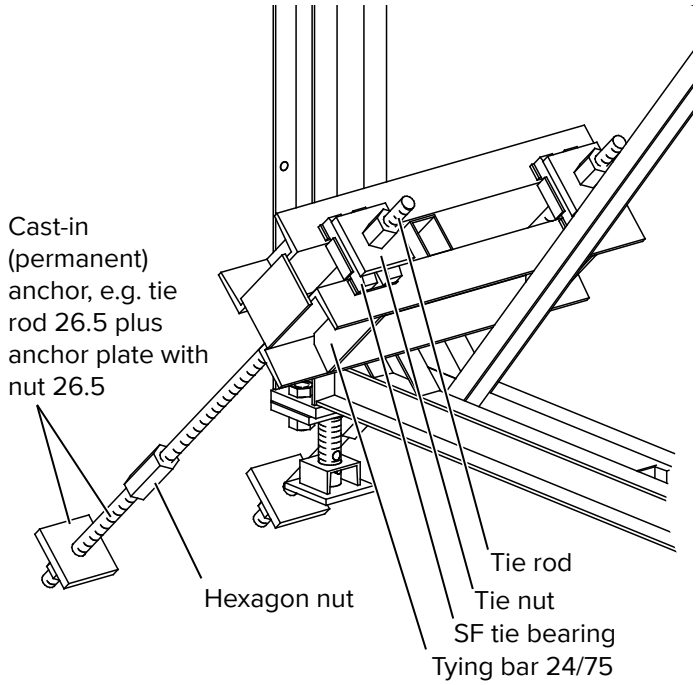

Wall-anchor distance

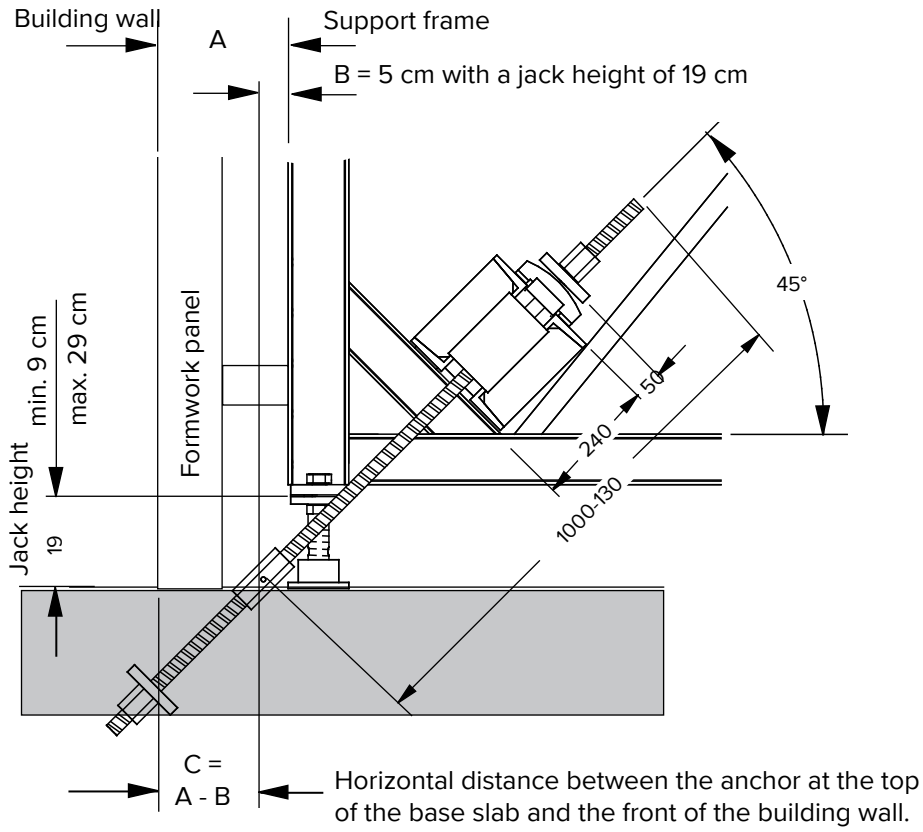

NOTE	**Note**
	Jack heights larger than 19 cm reduce dimension B for the same dimension. Jack heights less than 19 cm increase dimension B for the same scale.

Connection of timber beam

The support frames' vertical profile, which is open on both sides, permits grid-independent connection to the horizontal waler profiles of the timber beam formwork.

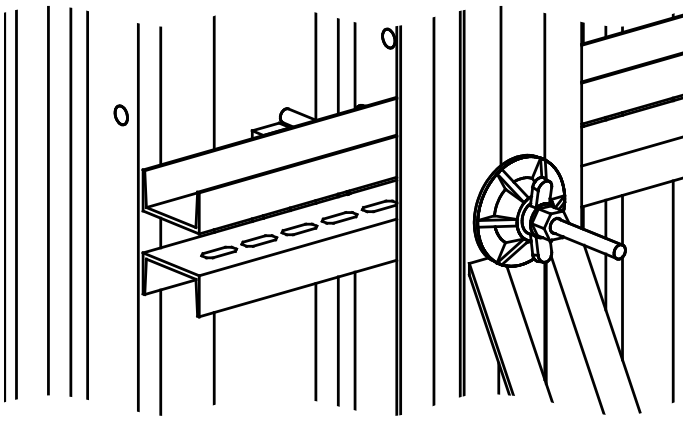

A tie rod 60 with two MANTO tie nuts is sufficient as a fastener.

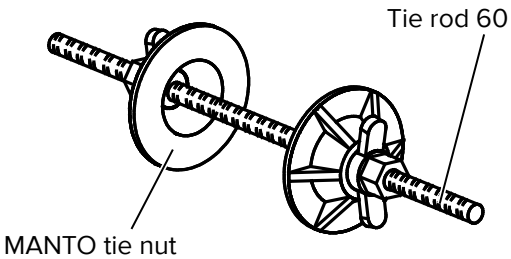

If the arrangement of the timber beams will not permit a threaded connection through the supporting frame profile, resort can be made to the perforated center tube 50 as a bridge profile.

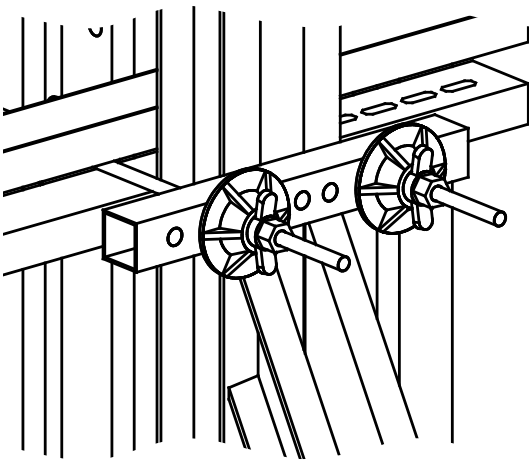

Clamping bolt consisting of one M16 x 60 bolt and nut, one 18 Z DIN 434 washer, clamping element with special washer

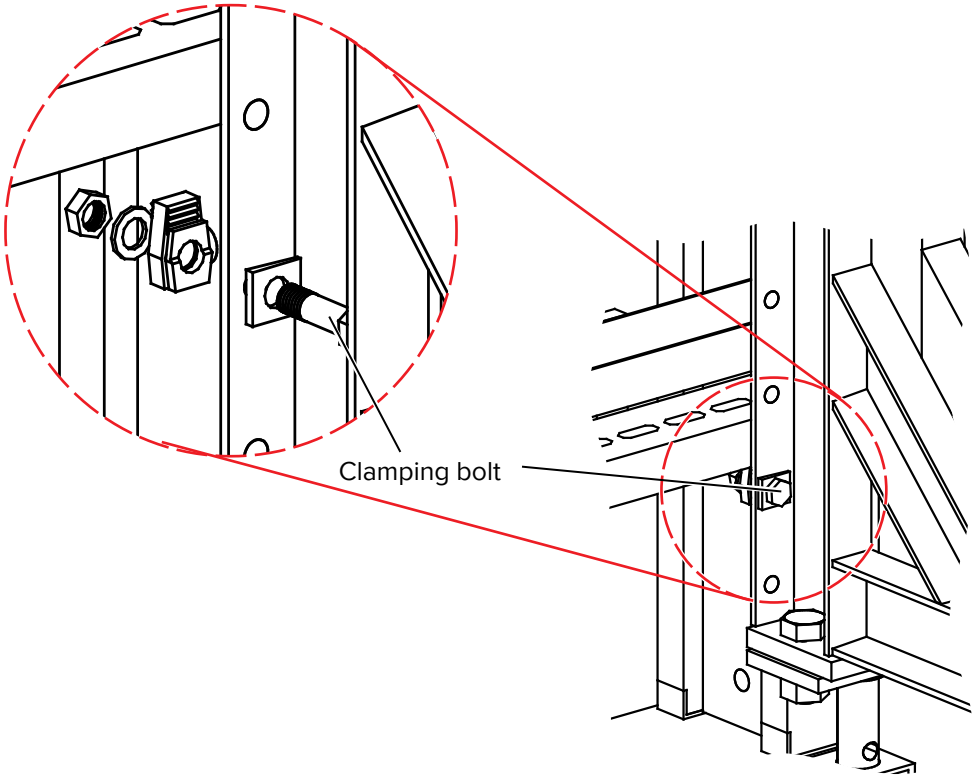

The bottom waler profile of the timber beam formwork is held in place with the clamping bolt. The clamping element of the clamping bolt must be aligned so that it rests against the bottom waler profile.

7 Practical examples

Support frame 325 with horizontal MANTO formwork

The support frame is placed immediately behind the formwork, always aligned with the tie holes. The components are easily connected with waler spanners and a tension nut in each case.

WARNING	**Warning!** The horizontal frame formwork must not be higher than the support frame.

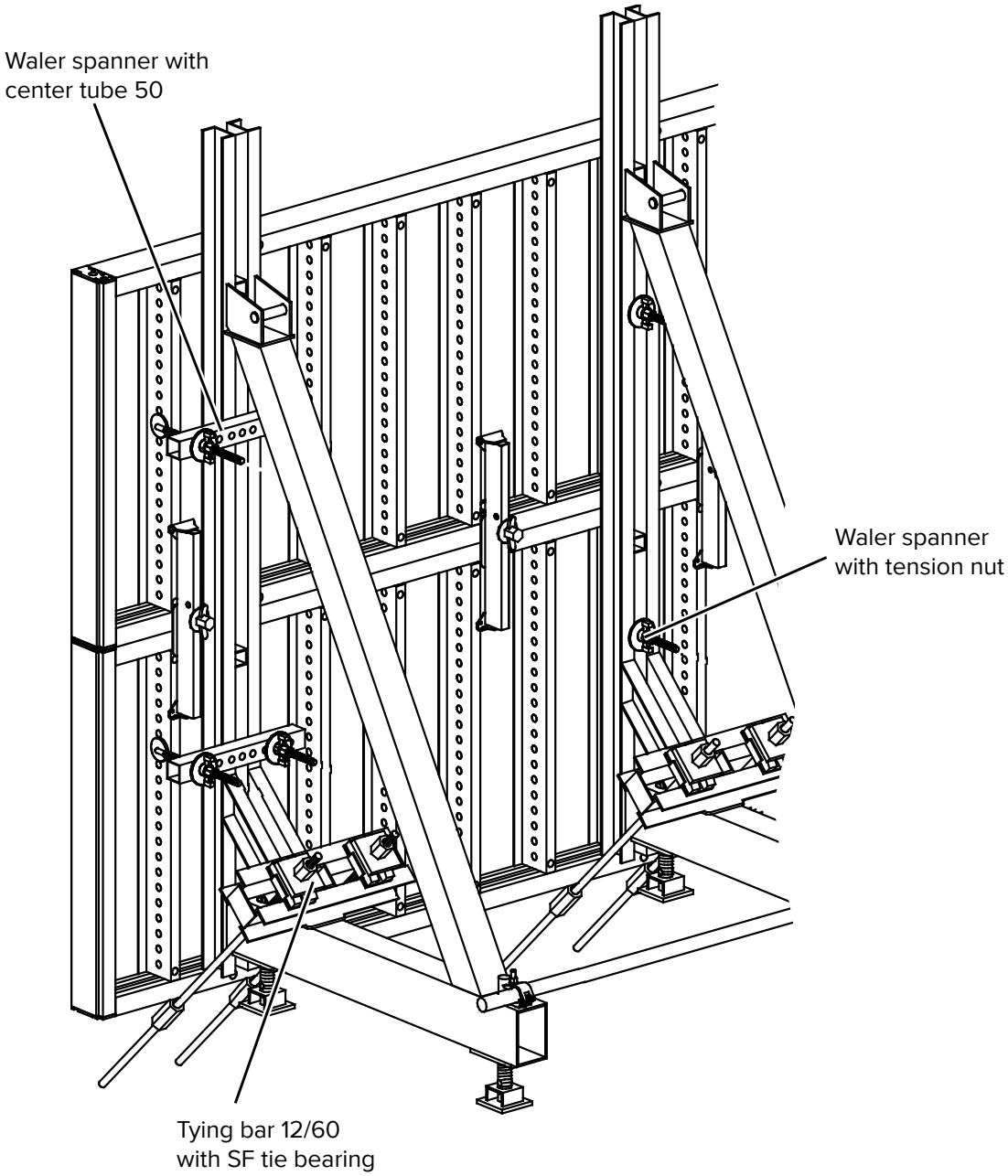

A single waler spanner is either passed through the support frame's double profile or two are passed on either side of the support frame through a center tube 50 serving as a cross member.

Support frame 325 with vertical MANTO formwork

In this case the support frame is always positioned at the joints of the formwork panels. The formwork connectors at these points are bridged with KG distance keepers. The KG distance keepers must all be clamped to the support frame at the height of the formwork's tie holes. The clamped joint permits stepless vertical displacement.

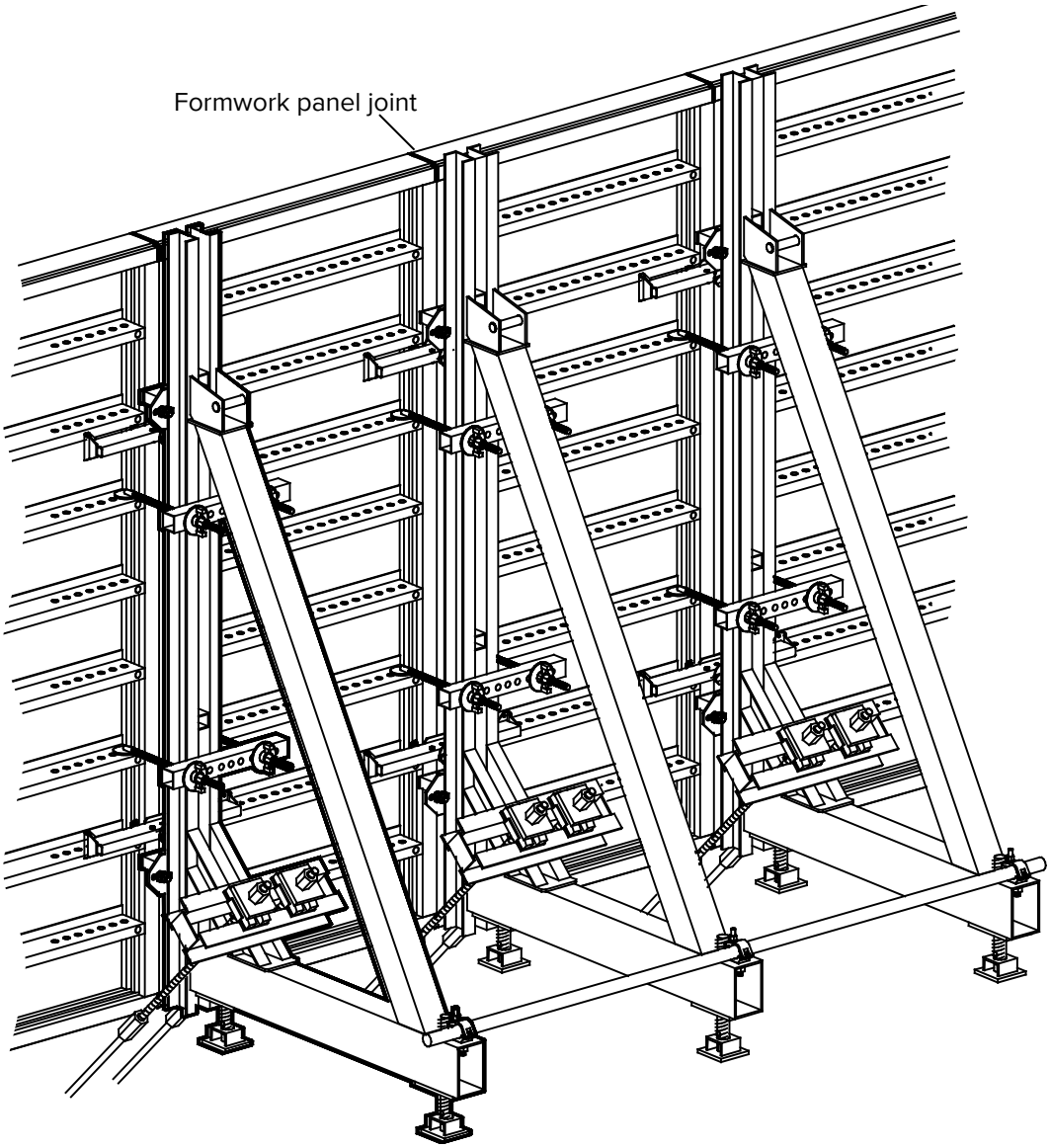

The formwork and support frame are connected with waler spanners (+ one tension nut in each case) and the center tube 50 serving as a cross member.

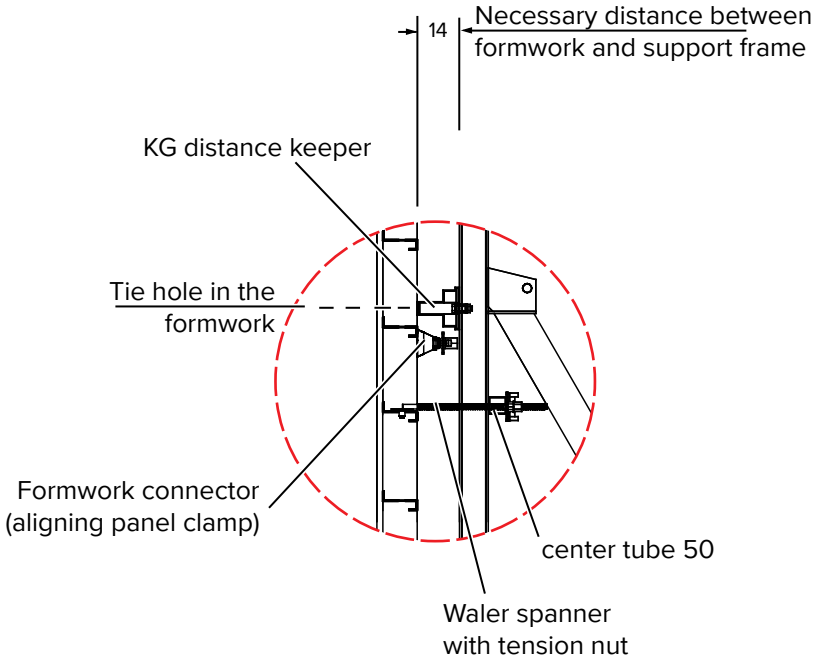

Support frame 325 with waler profiles

If waler profiles are used, the distance between support frames is no longer dependent on the grid of the formwork panels. The horizontal distance is now dictated by the structural characteristics of the frames, walers and anchors. Formwork systems with smaller panel widths (e.g. RASTO) can be efficiently employed with steel profile walers.

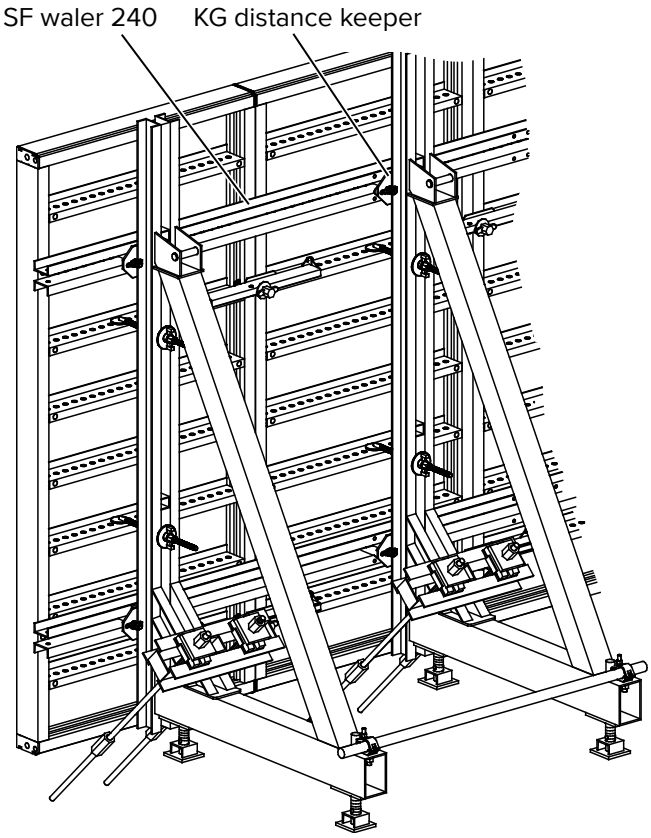

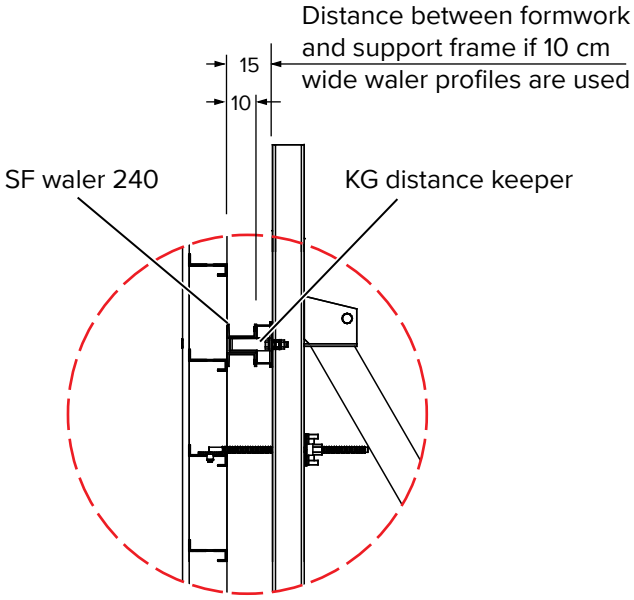

The SF waler 240 is held by the KG distance keepers clamped onto the support frame. Since these are vertically displaceable, the walers can always be aligned with the formwork's tie holes. The formwork and support frame are connected with waler spanners.

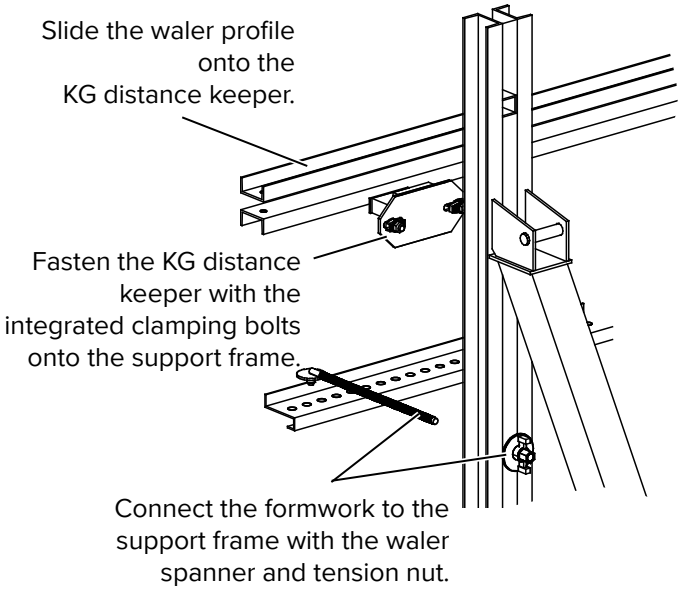

Support frames with the SF waler 240

The SF waler 240 is a component adapted to MANTO formwork. It is used for assembling 2.4 m wide formwork units, which remain dimensionally stable even after several re-uses thanks to the non-positive connections. The SF waler 240 has fixed connection points for the support frames. It is possible to position 2 or 3 support frames behind the SF waler 240. MANTO formwork can consist of a single large panel or of several smaller formwork panels.

2 support frames per 240 cm

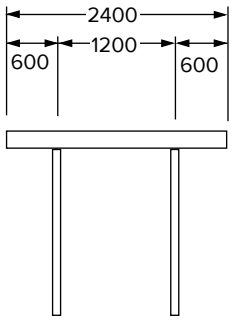

3 support frames per 240 cm

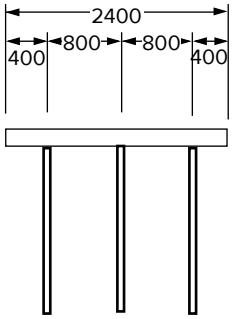

As an example, the illustration shows a formwork unit consisting of two support frames 500, SF walers 240 and 2 x 1.2 m wide MANTO formwork panels with a height of 3.9 m.

Detail X

The SF walers 240 are fastened to the formwork with the column waler bolt, which is passed through the MANTO panel's tie hole, and the column waler wedge. The column waler wedge must be inserted through the hole at the end of the waler into the column waler bolt. The bottom SF walers 240 and support frame are then non-positively connected with two connection bolts per connection point. Always use the third last hole in the vertical double profile of the support frame 500 or base frame. The SF walers 240 must be fitted in the illustrated position (slots a short distance apart on the bottom profile). All the other SF walers 240 are connected by being clamped to the support frame 500 or SF lower part. Fasten the SF walers 240 with two clamping bolts at each connection point.

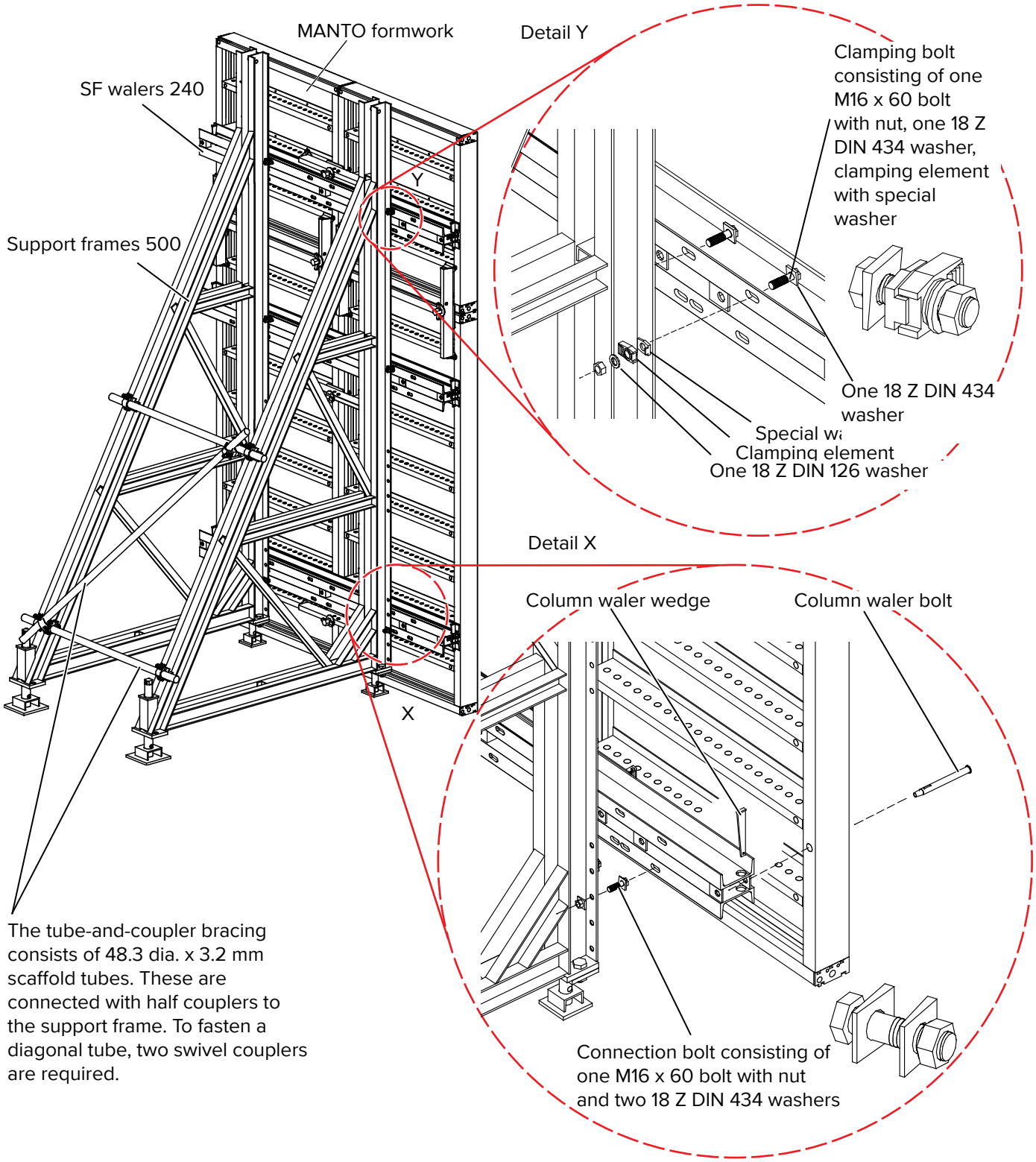

The tube-and-coupler bracing consists of 48.3 dia. x 3.2 mm scaffold tubes. These are connected with half couplers to the support frame. To fasten a diagonal tube, two swivel couplers are required.

8 Corners

With the support frame 325, SF walers 240 and the SF corner part specially designed for this application, the one-face formwork can also include an inner corner. The SF corner part connects the SF walers 240 in the corner and forms the supporting face for a diagonal support frame 325.

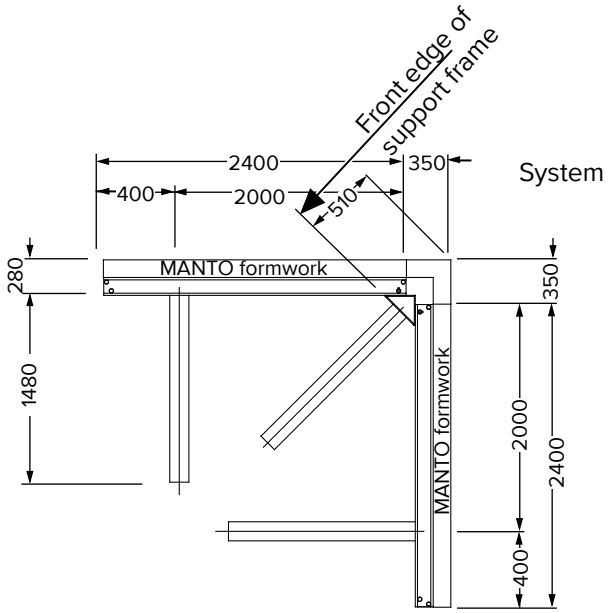

Each SF corner part is fastened to the SF walers 240 with two column waler wedges.

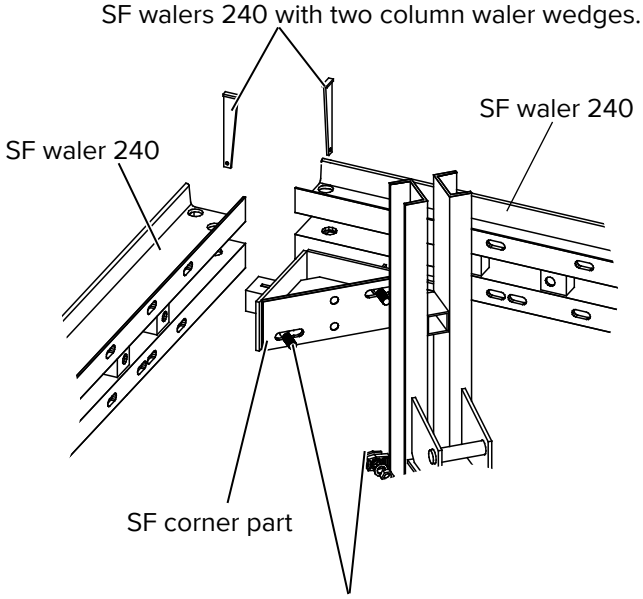

The clamping bolt (2 pcs.) fastens the support frame to the SF corner part.

WARNING

Warning!

Max. pouring pressure 50 kN/m² with this support frame arrangement !

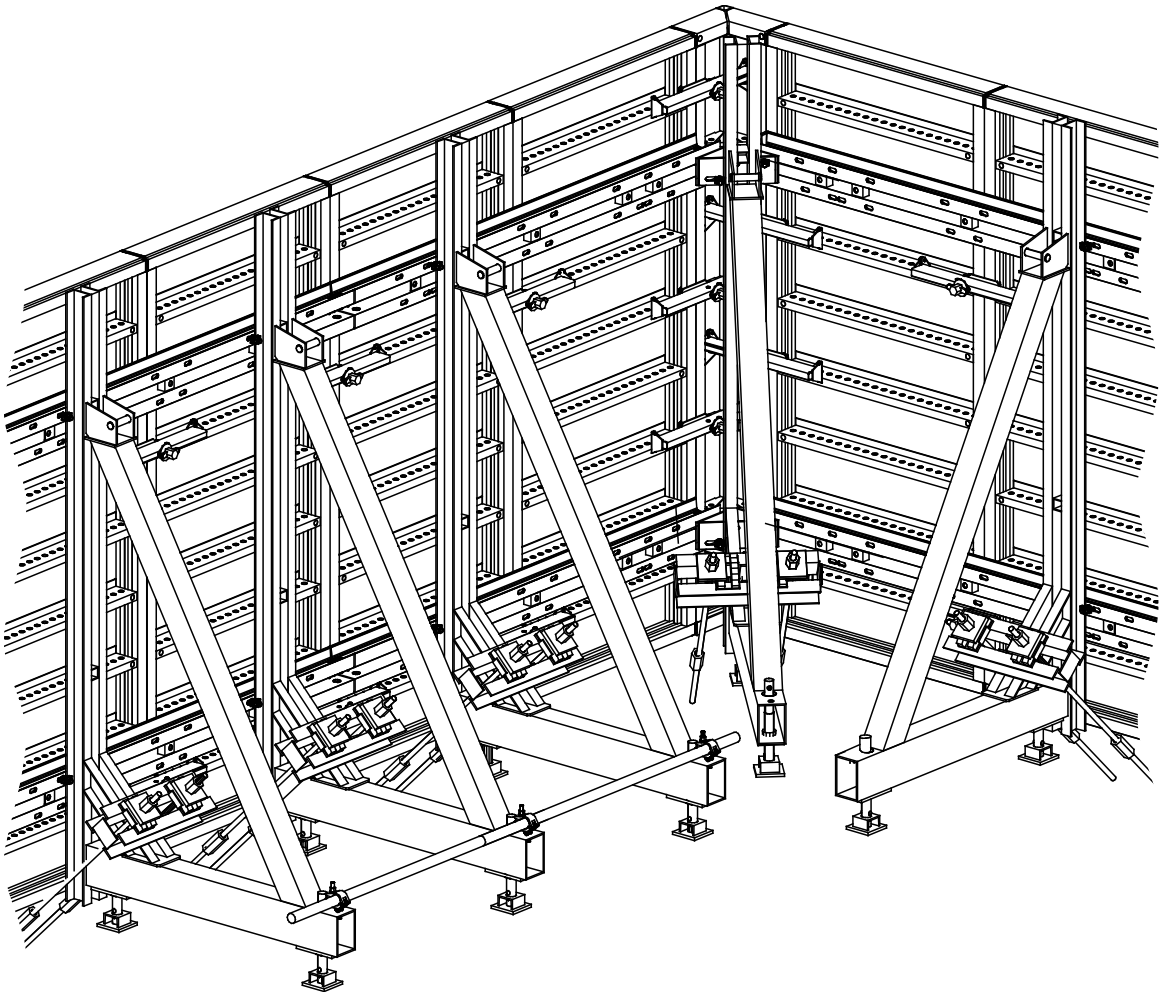

The Support frame 500 has only limited suitability for this application owing to its greater ground dimension.

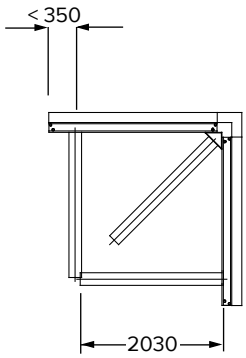

WARNING	**Warning!** When positioning the permanent anchoring components, take account of the increased distance between frames because of the diagonal support frame in the corner.

WARNING	**Warning!** Depending on loading, additional rows of walers may be necessary because of the large span.

9 Crane handling

Two SF shifting hooks on site make it possible to transport and lower formwork units by crane. Attached to the crane ropes, simply fasten the hook at the top of the support frame with the integrated pin.

The maximum load of the SF shifting hook is 1,500 kg.

This is sufficient to carry a formwork unit of max. 16 m^2 with attached support frames.

The crane ropes should not hang at an excessive angle!

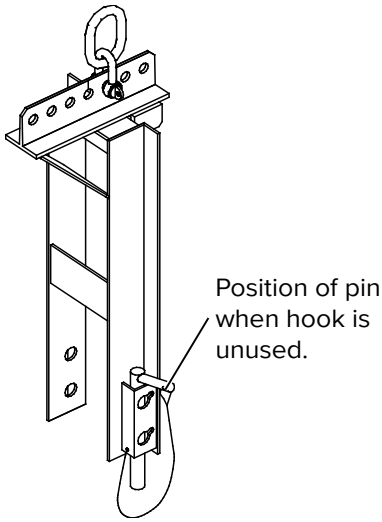

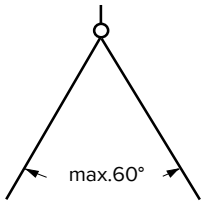

WARNING	**Warning!** The maximum angle of the crane slings must not exceed 60°!

Connecting points on the support frame 500 and the support frame 325

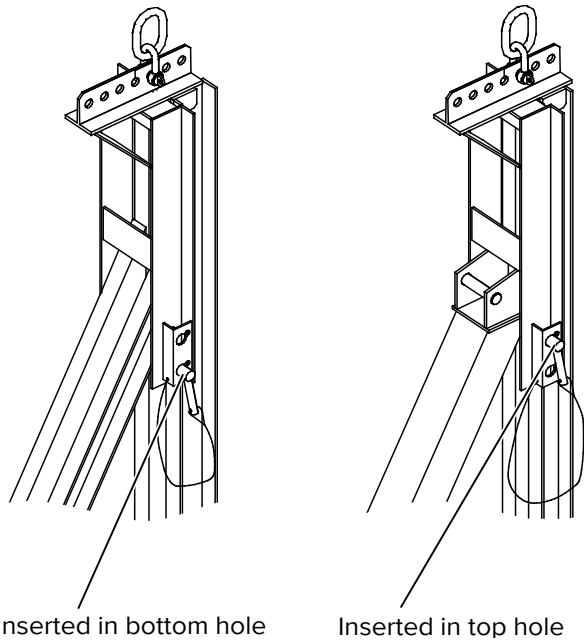

On the horizontal profile of the SF shifting hook is a suspension ring with a shackle. The best centere of gravity for the suspended formwork unit can be selected by adjusting the position of this ring and shackle. Be lifting and repositioning the shackle it is possible to determine the best position of the formwork unit for crane handling.

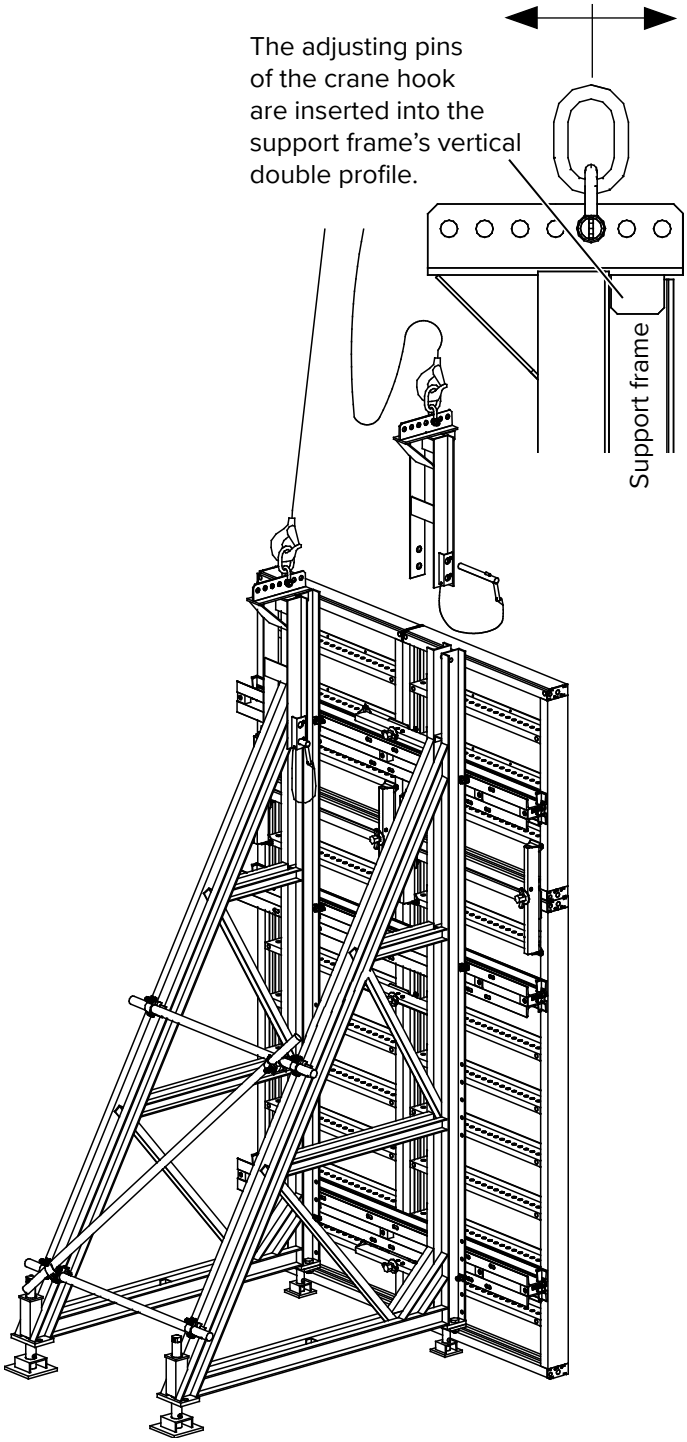

WARNING

Warning!

Please follow the SF shifting hook's own operating instructions.

10 Load tables

In the event of deviations from the figures specified in the tables, special proof of structural strength must be furnished. This applies particularly to the concrete pressure and the anchor angle.

H = Pouring height

Z = Total anchor loads

V = Jack loads

WARNING

Warning!

Only when the structure is sufficiently stiffened with tube-and-coupler bracing do the frames achieve their full load-bearing capacity.

Support frame 325

Anchor angle less than 45°

Concrete pressure kN/m²	Pouring height H (m)	Reaction forces			Max. distances between frames
		Z (kN/m)	V1 (kN/m)	V2 (kN/m)	
40	2.50	96	31	37	1.87
	2.75	110	28	51	1.63
	3.00	124	22	66	1.45
	3.25	138	14	84	1.24
50	2.50	106	38	38	1.70
	2.75	123	35	52	1.45
	3.00	142	31	70	1.27
	3.25	159	23	90	1.13
60	2.50	110	41	37	1.63
	2.75	132	41	52	1.37
	3.00	152	38	71	1.18
	3.25	174	32	92	1.03

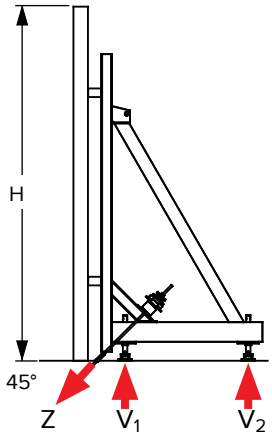

The building must be capable of absorbing the loads Z and V calculated here.

Support frame 500

Anchor angle less than 45°

Concrete pressure kN/m²	Pouring height H (m)	Reaction forces			Max. distances between frames
		Z (kN/m)	V1 (kN/m)	V2 (kN/m)	
40	3.50	153	34	74	2.16
	4.00	181	24	104	1.80
	4.50	209	8	140	1.55
	5.00	238	-8	181	0.97
50	3.50	177	45	80	1.88
	4.00	212	34	115	1.55
	4.50	247	17	158	1.31
	5.00	282	-2	207	0.97
60	3.50	195	54	85	1.72
	4.00	238	45	123	1.39
	4.50	280	27	170	1.16
	5.00	322	2	226	0.97

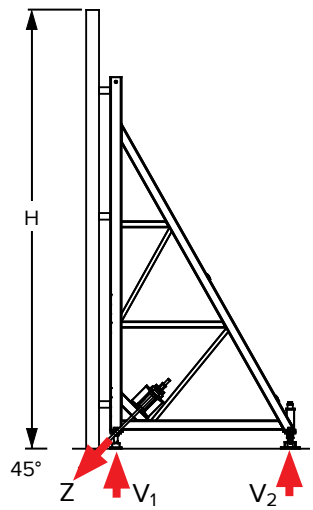

Sufficient ballast must be provided to prevent the structure lifting in the event of jack forces V_1 in the minus range.

Support frame 500 with SF lower part 200

Anchor angle less than 45°

Concrete pressure kN/m²	Pouring height H (m)	Reaction forces			Max. distances between frames
		Z (kN/m)	V1 (kN/m)	V2 (kN/m)	
40	5.50	266	60	128	1.74
	6.00	294	49	159	1.56
	6.60	328	31	200	0.97
50	5.50	318	78	147	1.45
	6.00	354	66	183	1.30
	6.60	396	47	233	0.97
60	5.50	365	97	161	1.27
	6.00	407	85	203	1.13
	6.60	458	63	260	0.97

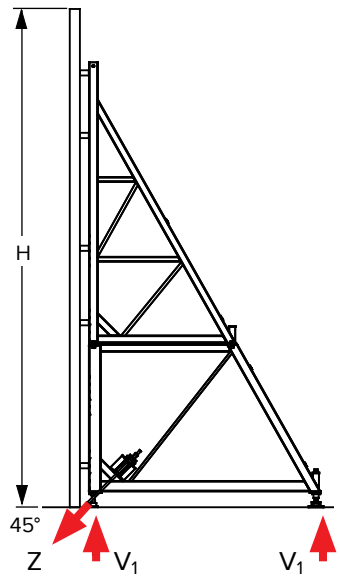

Support frame 500 with SF Lower part 200 and SF Lower part 200/2

Anchor angle less than 39°

Concrete pressure kN/m²	Pouring height H (m)	Reaction forces			Max. distances between frames
		Z (kN/m)	V1 (kN/m)	V2 (kN/m)	
40	7.00	319	25	176	1.56
	7.50	345	12	206	1.44
	8.00	371	7	239	1.34
	8.60	402	-16	281	0.97
50	7.00	386	37	206	1.29
	7.50	418	21	243	1.19
	8.00	451	2	282	1.10
	8.60	489	-14	334	0.97
60	7.00	448	51	232	1.11
	7.50	487	32	274	1.02

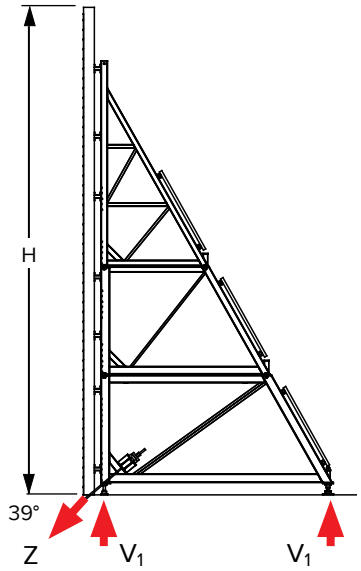

Unless stated otherwise all dimensions are in mm

11 Chronology

Changes compared to issue 2010-03		
Changes	**Page**	**Date**
Layout updated	div	2019-02

Hünnebeck
Deutschland GmbH
Rehhecke 80
D-40885 Ratingen
+49 2102 9371
info_de@huennebeck.com
www.huennebeck.com

The illustrations in this brochure depict actual site conditions which may not always conform with applicable safety rules and regulations.

Last updated: February 2019
Keep for later use!

2300 EN 2019-02-01

Drucknorm